PRODUCT SPECIFICATIONS

General	Model	1			CPQYD25
	Power Type	2			GAS/LPG
	Load Capacity	3		kg	2500
	Load Center Distance	4	@ rated load center	mm	500
Weights	Service Weight	5	unloaded	kg	3370
	Axle Load	6	loaded,front/rear	kg	4390/670
		7	unloaded,front/ rear	kg	1350/2020
Tires	Tire Type	8			Pneumatic
	Wheels	9	front / rear		2 / 2
	Wheelbase	10		mm	1650
	Tire Size	11	front		7.00-12-12PR
		12	rear		6.00-9-10PR
	Tread Width	13	front/rear	mm	960/970
Mast	Max. Fork Height	14	with std 2-stage mast	mm	3000
	Freelift	15	with std 2-stage mast	mm	140
	Height, Upright Lowered	16	with std 2-stage mast	mm	2070
	Height, Upright Extended	17	with std 2-stage mast	mm	4025
	Mast Tilt, Fwd/Back	18	with std 2-stage mast	deg	6° / 12°
	Fork Carriage	19	width	mm	1100
	Fork Spread	20	minimum/maximum	mm	272/1072
	Fork Dimension	21	T x W x L	mm	40 x 122 x 1070
Chassis	Length to Fork Face	22	with std 2-stage mast	mm	2500
	Overall Width	23		mm	1150
	Overhead Guard Height	24		mm	2100
	Turning Radius	25	minimum outside	mm	2190
	Fork Overhang	26	with std 2-stage mast	mm	476
	Min.right angle stacking aisle width	27	add load length and clearance	mm	3935
	Ground Clearance	28	loaded below mast	mm	110
		29	center of wheelbase	mm	120
Performance	Travel Speed	30	loaded/unloaded	km/h	19/20
	Lift Speed	31	loaded/unloaded	mm/s	460/500
	Lowering Speed	32	loaded/unloaded	mm/s	550/400
	Max. Drawbar Pull	33	loaded	N	16475
	Max. Gradeability	34	loaded/unloaded	%	18/20
Systems	Brakes	35	service		Foot/Hyd
		36	parking		Hand /Mech
Internal combustion	Engine	37	manufacturer		GCT
		38	model		GK25
		39	emission compliance		N/A
		40	cylinders		4
		41	displacement	L	2.488
		42	rated power	kw/rpm	35.9/2300(LPG) 37.4/2300(GAS)
		43	max. torque	N.m/rpm	160/1900

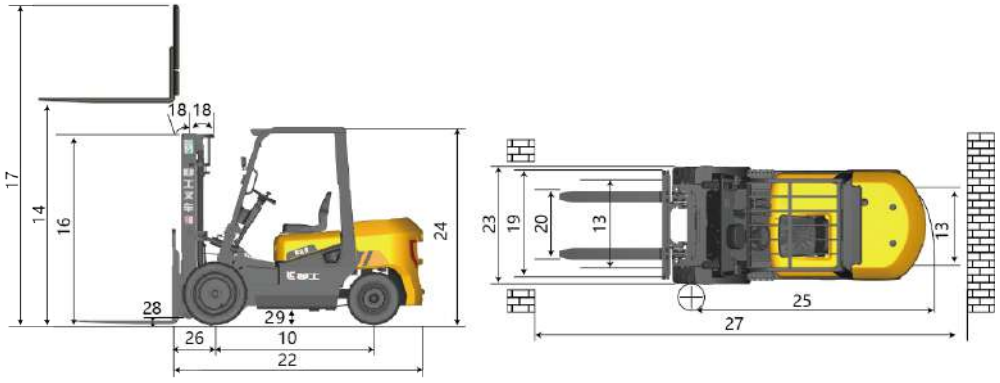

LiuGong

E SERIES



Engine	GCT
Fuel	LPG/GAS
Rated load	2500kg
Rated Power	37.4 kW

CPQYD25

E SERIES INTERNAL COMBUSTION COUNTERBALANCED FORKLIFT

TOUGH WORLD. TOUGH EQUIPMENT.