PRODUCT SPECIFICATIONS

General	Model	1			CPCD85		
	Configuration No	2			EY7	EW3	EC5
	Power source	3				Diesel	
	Load capacity	4	@ rated load center	kg		8500	
	Load centre distance	5		mm		600	
Weights	Service weight	6		kg		11600	
	Axle loading	7	With load (front/rear)	kg		17460/2715	
		8	Without load (front/rear)	kg		5400/6200	
Tires	Tire type	9				Pneumatic	
	Wheels, number	10	Front/rear			4/2	
	Wheelbase	11		mm		2600	
	Tire size	12	Front			9.00-20-14PR	
		13	Rear			9.00-20-14PR	
	Tread width	14	Front (standard duals tires)/rear	mm		1600/1722	
Mast	Maximum fork height	15	with standard 2-stage mast	mm		3000	
	Freelift	16		mm		200	
	Height, upright lowered	17		mm		2850	
	Height, upright extended	18		mm		4343	
	Mast tilt, fwd/back	19		°		6/12	
	Fork carriage	20	Width	mm		2080	
	Fork spread out-to-out	21	Minimum/maximum	mm		420-2000	
	Fork dimension	22	T x W x L	mm		80×175×1520	
Chassis	Length to fork face	23	With std 2-stage mast	mm		4064	
	Overall width	24		mm		2170	
	Overhead guard height,cab,AC	25		mm		2560	
	Minimum outside turning radius	26		mm		3750	
	Front overhang	27	With std 2-stage mast	mm		718	
	Min.right angle stacking aisle width.	28	Add load length and clearance.	mm		5668	
	Ground clearance	29	Loaded below mast	mm		246	
		30	Center of wheelbase	mm		340	
Performance	Travel speed	31	Loaded/unloaded	km/h	28/30	25/27	28/30
	Lift speed	32	Loaded/unloaded	mm/s	340/380	320/380	340/380
	Lowering speed	33	Loaded/unloaded	mm/s	400/320	400/320	400/320
	Max. drawbar pull	34	Loaded	N	65/35	60/35	65/35
	Max. gradeability	35	Loaded/unloaded	%	22/25	20/25	22/25
	Brakes	36	Service			foot-operated, hydraulic	
		37	Parking			Hand operated, mechanical	
Powertrain System	Engine	38	Manufacturer		Yuchai	Isuzu	Cummins
		39	Model		YC4A125Z-T21	A-6BG1QC-02	QSF3.8
		40	Emission compliance		CHN-II	EU-I	EU-III
		41	Number of cylinders/ displacement		4	6	4
		42	Displacement	L	4.837	6.49	3.76
		43	Rated power	kw/rpm	92/2200	82.4 / 2000	86/2200
		44	Max. torque	N.m/rpm	460/1450-1650	416.8/1500	470/1100-1700
	Transmission	45	Type		Automatic hydraulic transmission (Electrical powershift)		
		46	Speeds forward / backward			2/2	
Additional Data	Operating pressure	47		MPa		20	
	Operating pressure for attachments	48		MPa		16	
	Fuel tank, capacity	49		L		190	
	Battery voltage/capacity	50		V/Ah		2x12/93	

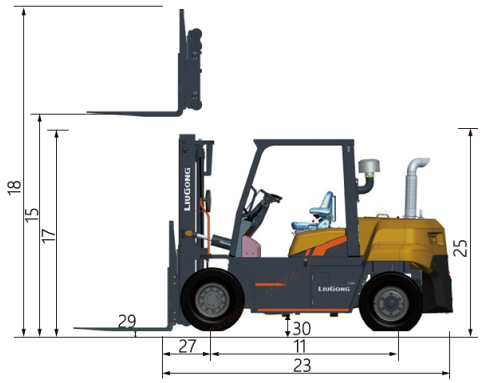

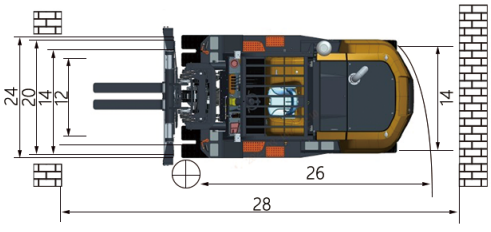

LiuGong

E SERIES



Fuel	Diesel
Rated load	8500kg

CPCD85

E SERIES INTERNAL COMBUSTION COUNTERBALANCED FORKLIFT

TOUGH WORLD. TOUGH EQUIPMENT.