LiuGong



Power Source	Electric
Rated Capacity	18,000 kg
Drive Motor Power	125 kW

CPD180 E-SERIES FORKLIFT

TOUGH WORLD. TOUGH EQUIPMENT.

CPD180
SPECIFICATIONS >>>

GENERAL	
Model	CPD180
Option	EH-12
Power Type	Electric
Rated Capacity	18,000 kg
Rated Load Center	1,200 mm
X Front Overhang, Std. 2-stage Mast	965 mm
Y Wheelbase	4,000 mm

WEIGHT	
Service Weight	26,500 kg
Axle Loading (Loaded, Front/Rear)	38,622/5,878 kg
Axle Loading (Unloaded, Front/Rear)	11,380/15,120 kg

TIRES	
Tire Type (Front/Rear)	Pneumatic
Front Tire Size	12.00-20/28PR
Rear Tire Size	12.00-20/28PR
Number of Wheels (Front/Rear) (x=Drive Wheels)	4×/2
b_{10} Front Tread	1,930 mm
b_{11} Rear Tread	1,966 mm

PERFORMANCE	
Travel Speed (Loaded/Unloaded)	25/25 km/h
Lift Speed (Loaded/Unloaded)	410/410 mm/s
Lowering Speed (Loaded/Unloaded)	400/400 mm/s
Max. Gradeability (Loaded/Unloaded)	24/30 %

DIMENSIONS	
Mast Tilt (FWD/REV)	6/12 deg
h_1 Height (Upright Lowered), Std. 2-stage Mast	3,380 mm
Free Lift, Std. 2-stage Mast	/ mm
h_3 Max. Fork Height, Std. 2-stage Mast	4,000 mm
h_4 Height (Upright Extended), Std. 2-stage Mast	4,880 mm
h_6 Overhead Guard Height	3,300 mm
Coupling Height	490 mm
l_2 Length to Fork Face, Std. 2-stage Mast	5,656 mm
b_1 Overall Width	2,663 mm
Fork Dimensions (Thickness/Width/Length)	110×200×2440 mm
Fork Carriage (ISO 2328, Class/Type A, B)	/
Fork Carriage Width	2,590 mm
b_5 Fork Spread (Min./Max.)	260/660 mm
Ground Clearance (Loaded, Below Mast)	260 mm
m_2 Ground Clearance (Center of Wheel-base)	320 mm
A_{st} Aisle Width (for 1,000×1,200 Pallets, Crossways)	9,110 mm
A_{st} Aisle Width (for 800×1,200 Pallets, Lengthways)	/ mm
W_a Turning Radius	5,600 mm

SYSTEMS	
Drive Motor Rating (S2, 60 min)	125 kW
Lift Motor Rating (S3, 15%)	80 kW
Battery Type	Lithium
Battery Voltage/Capacity, Std.	657/176 V/kW·h
Battery Weight, Std.	1,110 kg
Working Pressure	24.5 Mpa
Service Brake/Parking Brake	Hydraulic/Mechanical

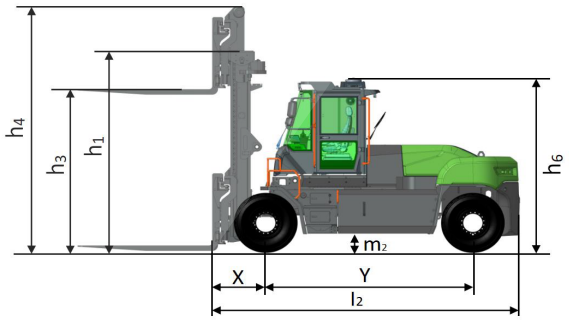

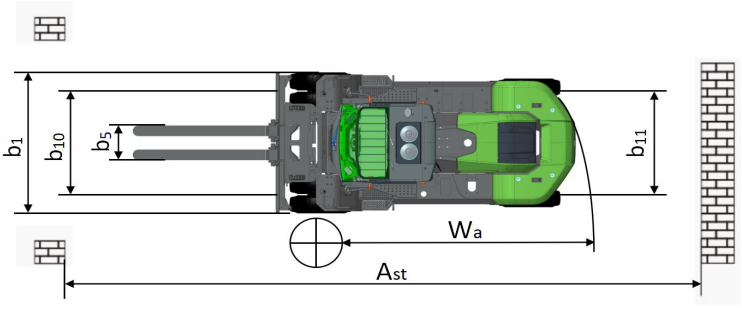

Guangxi Liugong Machinery Co., Ltd.
No. 1 Liutai Road, Liuzhou, Guangxi 545007, PR China
T: +86 772 3886124 E: overseas@liugong.com
www.liugong.com

09/2026 Designed by LiuGong

Specifications and designs are subject to change without notice. Machines shown may include optional equipment. LiuGong standard and optional equipment may vary from region to region. Please consult your LiuGong dealer for information specific to your area. Engine power kW is converted to horsepower (1 kW=1.3596 ps and 1 kW=1.3410 hp) in this file.