LiuGong



Power Source	Electric
Rated Capacity	45,000 kg
Drive Motor Power	157/310 kW

LRSE4531E E-SERIES REACH STACKER

TOUGH WORLD. TOUGH EQUIPMENT.

LRSE4531E SPECIFICATIONS >>>

TECHNICAL PARAMETER	
Model	LRSE4531E
Power Type	Electric
Boom Max. Lifting Height	15,100 mm
Boom Tilt	60 °
Max. Lifting Speed (Unloaded/Loaded)	420/250 mm/s
Max. Lowering Speed (Unloaded/Loaded)	360/300 mm/s
Max. Travel Speed (Unloaded/Loaded)	21/15 km/h
Gradeability (Unloaded/Loaded)	21/14 %
Service Weight	73 t
Rated Carrying Capacity	45 t
Stacking Layers	5
L Overall Length	11,311 mm
L1 Wheelbase	6,000 mm
H Overall Height	4,777 mm
H1 Min. Ground Clearance	350 mm
W/W1 Overall Width(At Retracted Spreader/Front Wheel)	6,053 mm
T1 Front Wheel Tread	3,033 mm
T2 Rear Wheel Tread	2,798 mm
R Min. Turning Radius	8,000 mm
A1 Aisle Width For 20 ft. Container	11,300 mm
A2 Aisle Width For 20 ft. Container	13,600 mm

TIRES	
Tire Size	18.00-25-40PR

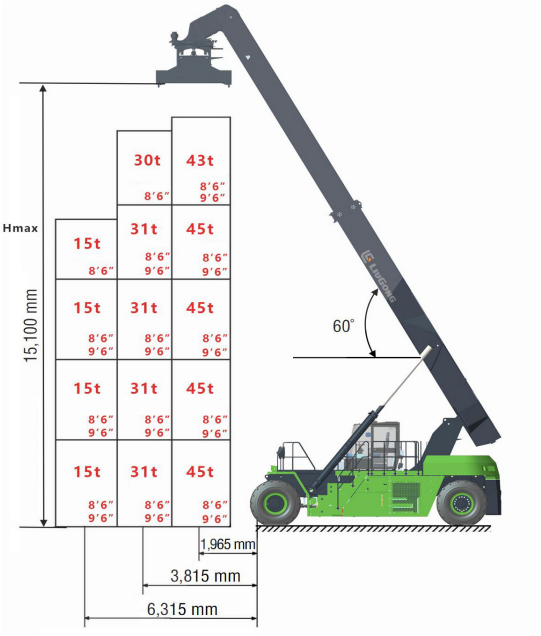

BATTERY	
Type	Lithium
Voltage	618/580 V
Capacity	423/525 kW·h
Charging Time	1.5/1.8 h
Battery Running Time	8/10 h
Protection Degree	IP68
Other Functions	Heating/Water cooling

DRIVE MOTOR	
Type	Permanent magnet synchronization
Work Class	S9
Power (Rated/Peak)	157/310 kW
Torque (Rated/Peak)	1,500/4,200 N·m
Speed (Rated/Peak)	1,000/2,800 r/min
Protection Degree	IP67

DRIVE AXLE	
Drive Axle Model	Kessler D102PL341/ WF0432A0-1

SPREADER	
Model	ELME/LiuGong
Lateral Movement Distance	±800 mm
Rotating Angle	+105/-195 °
Tilt Angle	±2 °
Operation Weight	7.8/8.2 t
Applicable Objects	ISO20'/40'/45' Container

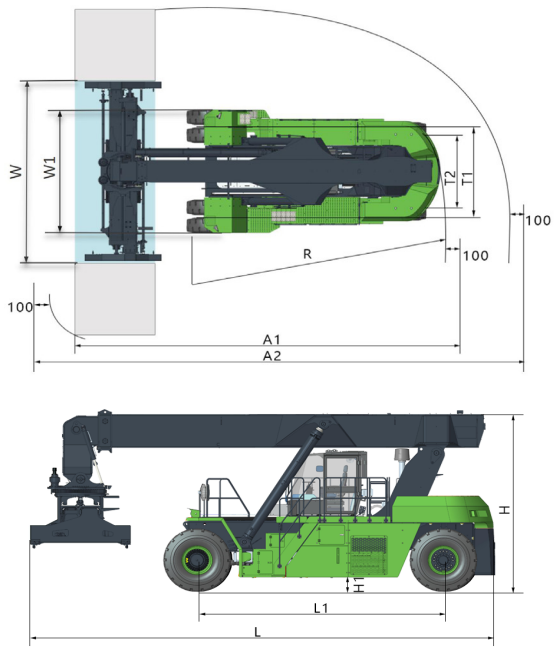

Guangxi Liugong Machinery Co., Ltd.
No. 1 Liutai Road, Liuzhou, Guangxi 545007, PR China
T: +86 772 3886124 E: overseas@liugong.com
www.liugong.com

02/2026 Designed by LiuGong

Specifications and designs are subject to change without notice. Machines shown may include optional equipment. LiuGong standard and optional equipment may vary from region to region. Please consult your LiuGong dealer for information specific to your area. Engine power kW is converted to horsepower (1 kW=1.3596 ps and 1 kW=1.3410 hp) in this file.