Creating a Better Future

LIUGONG

TOUGH WORLD. TOUGH EQUIPMENT.

Liuzhou Liugong Forklift Co., Ltd.
No. 1 Yanghe Avenue, Yanghe Industrial
New Zone, Liuzhou City, Guangxi
Zip Code (P): 545006
Sales Hotline (T): 0772-2040713
Service Hotline (T): 0772-2040720/ 0772-2040721
E-mail (E): liugonglrs@liugong.com
Website (W): www.lgforklift.cn

Official website

Media Platform

LG-PB-LRS4531E -2212

The LiuGong series of logos herein, including but not limited to word marks, device marks, letter of alphabet marks and combination marks, as the registered trademarks of Guangxi LiuGong Group Co., Ltd. are used by Guangxi LiuGong Machinery Co., Ltd. with legal permission, and shall not be used without permission. Specifications and designs are subject to change without notice. Illustrations and pictures may include optional equipment and may not include all standard equipment. Equipment and options varies by regional availability.

LIUGONG

E SERIES REACH STACKER

【SAFETY AND RELIABLITY】
【SMART AND EFFICIENT】
【COMFORT AND CONVENIENCE】
【ENERGY CONSERVATION AND ENVIRONMENTAL PROTECTION】

01
SAFETY AND RELIABLITY

Safe: Human-Vehicle Protection, Safety First

Rollover Protective Structure (ROPS)/ Rollover Protection
Safety: Protecting both people and vehicles; Safety First.

360° Panoramic Image
The blind spots around the vehicle can be seen on the screen with 360 panoramic images, and the correct decision can be made to avoid accidents.

Automatic Fire Extinguishing System
Layout temperature monitoring sensors around the engine to monitor the temperature and smog inside the engine compartment in real time to alarm and automatic fire extinguishing , thus protecting both people and vehicles and avoiding accidents.

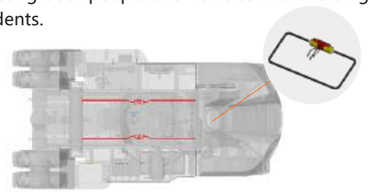

Reliability: Inheriting LiuGong’ s gene of Durability

Single-layer Large Pitch Radiator
The overall layout design of the radiator through
simulation technology aims to realize the sustainable operation ability of the radiator in high temperatures, high dust and other working environments.

Aluminum Alloy Fuel Tank
The fuel system is cleaner, and the life of power elements is longer.

Optimization of Rear Axle Steering Mechanism
Optimizing the dual-energy steering angle deviation through simulation technology reduce the steering angle deviation rate by 90% and extend the tire life by 0.5 times.

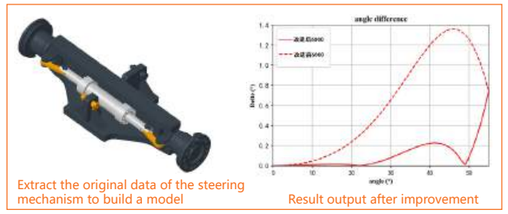

Extract the original data of the steering mechanism to build a model

Result output after improvement

Stress Analysis and Improvement of Vehicle Structure
Adhering to LiuGong's design concept of powerful equipment under extreme working conditions, a stress simulation analysis has been conducted on the whole vehicle structure to achieve equipment durability.

Durable Core Components
Depending on over 30-year cooperation with LiuGong, world-famous components suppliers offer reliable products for LiuGong based on thecondition-adaptability-oriented concept.

02
SMART AND EFFICIENT

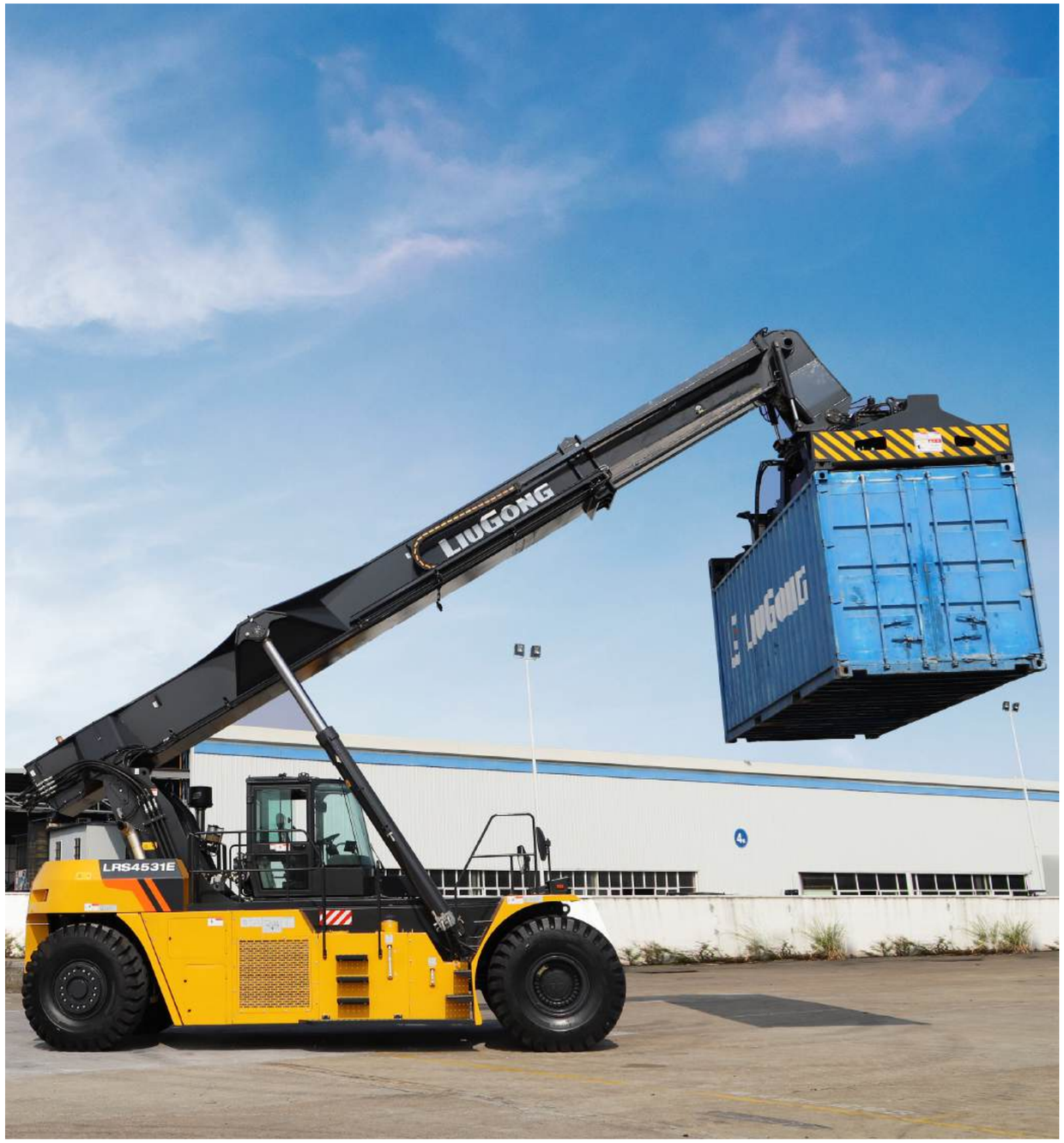

HUMAN-MACHINE INTELLIGENT, STABILITY AND EFFICIENCY

Power System Matching Technology

By simulating and matching the complete power system (working habits + engine + gearbox), the power matching is optimized, and the controller, handle, pump and valve are combined with the dynamic power matching system to shorten the system response time from 0.7s to 0.2s, the power output is more stable, and the operating efficiency of the hanging box is increased by 6%, thereby achieving more stable power output and improving the efficiency of box lifting by 6%.

Electric-Control Load Sensing Hydraulic System

High-efficiency e-control & pilot-operated proportional valves enable the vehicle to receive an instantaneous response and high-efficiency and stable self-automatic operation under work conditions.

Vertical Lift Technology

This system monitors and automatically calculates the angle and weight of the container hoisting in real-time and starts the compound action of boom lifting and telescoping with one button to realize the vertical lifting operation mode of the container hoisting. Significantly improve the efficiency of cross-container, train loading and unloading and other related operations.

Adaptive Anti-swing Damping Regulation Technology

The system monitors the actual status of the container hoisting operation in real time, adjusts the swing range of the container, and improves the efficiency of container hoisting.

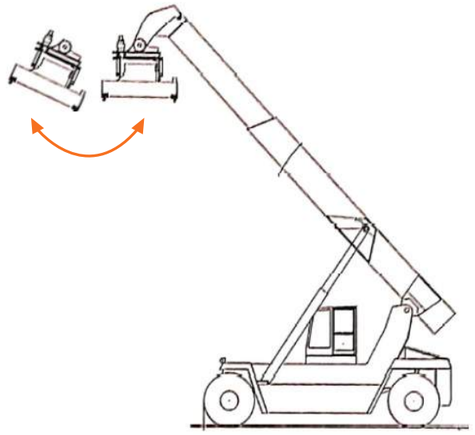

03
COMFORT AND CONVENIENCE

DRIVING EXPERIENCE FROM FIRST-CLASS CAB, ONE-STOP MAINTENANCE

Electric Mobile Cab

One-button operation can conveniently and quickly adjust the field of view and angle. Angle in the cab. The starter battery can be turned on, and the cab can be moved by operating the button under off-vehicle condition. This technology is the first innovative technology put into use in China.

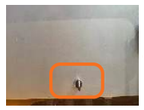

Off-Vehicle Operation Button

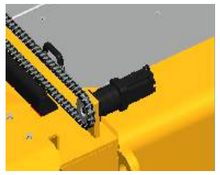

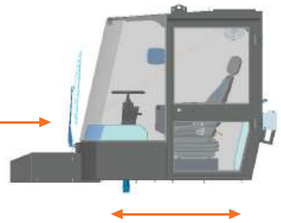

Quiet and Comfortable Driving Space 1

The noise around the driver's ear is less than or equal to 70dB, which is better than that of the same industry.

All-Rund illuminating

Working lights are well set on the front, rear, boom and slings for lifting loads to meet all the needs of various operating condition.

One-stop Maintenance

Equipped with ladder aisles on the left and right sides + access doors on the side, This layout configuration does not require trenches to enter the interior of the vehicle body for maintenance of engine, gearbox, transmission components and other components + replacement of external maintenance parts + centralized maintenance of electric control cabinets.

Left side:

Ladder on the left

Oil-water separator at the outer side is easy to check and maintain

An air filter can be checked and maintained while standing on the ground.

Right side:

Centralized Maintenance of Ladder on the right

Since there is an inspection door on the side, no trench is required for inspection. to enter the interior of the vehicle body for maintenance of engine, gearbox, transmission components and other components

Ladder on the right

04 ENERGY CONSERVATION AND ENVIRONMENT PROTECTION

Careful Calculation and Strict Budgeting for Customer

LiuGong Patent Hydraulic Defoaming Technology

Prolonged oil change intervals; Reduced maintenance costs; The defoaming rate is up to 95%, can improve the reliability of hydraulic components by reducing the cavitation erosion.

Defoamed ratio 50%

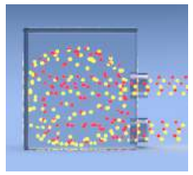

with Defoaming System

Defoamed ratio 95%

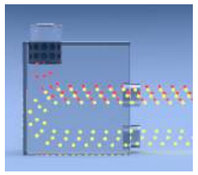

without Defoaming System

Exclusive Power Curve Adjusting

Cummins exclusively designs power curves for the whole series of LiuGong products based on simulations of different operating conditions to realize the perfect match and produce high-efficiency and energysaving products with a 3% reduction in fuel consumption.

Leading Post-processing Technology

Applying globally-leading Cummins postprocessors to monitor the temperature during the combustion comprehensively, enabling robust self-independent regeneration, lowering the rate of parking regeneration and 5% urea consumption. High-efficiency operation & longer service life, lower urea consumption cost.

05 SPECIFICATIONS

S/N	Technology Parameters	Unit	Model	
			LRS4531E	LRS4535E
1	Boom Max. Lifting Height	mm	15100	15100
2	Boom tilt	°	0~60	0~60
3	Max. lifting speed (unloaded/full load)	mm/s	420/250	420/250
4	Max. lower speed (unloaded//full load)	mm/s	360/300	360/300
5	Max. travel speed (unloaded//full load)	km/h	25/22	25/18
6	Gradeability (unloaded//full load)	%	40/32	38/24
7	Operation weight	t	72	76.5
8	Rated carrying capacity	t	45	45
9	Stacking Layers	-	5	5
10	Overall Length L	mm	11311	11786
11	Wheelbase L1	mm	6000	6500
12	Overall Height H	mm	4740	4870
13	Minimum ground clearance H1	mm	350	400
14	Overall width W	mm	6053-12185	6053-12185
15	Front wheel tread T1	mm	3033	3033
16	Rear wheel tread T2	mm	2798	2798
17	Minimum turning radius R	mm	8000	8800
18	20ft container aisle width A1	mm	11300	11600
19	40ft container aisle width A2	mm	13600	13600

06 DIMENSION

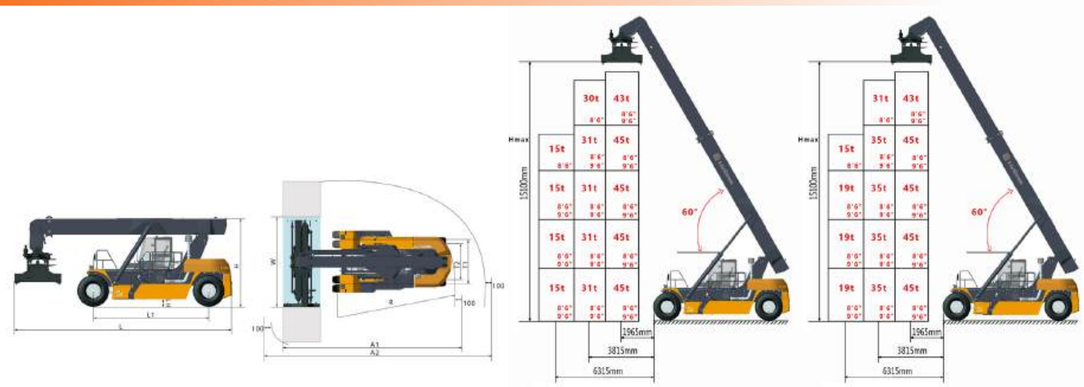

LRS4531E LRS4535E

07 SPECIFICATIONS

S/N	Technology Parameters		Unit	Model	
				LRS4531E	LRS4535E
1	Engine	Model		Cummins X12	Cummins X12
2		Rated power / speed	kW/rpm	261/2100	261/2100
3		Maximum torque / speed	Nm/rpm	1830/1400	1830/1400
4		Exhaust gas emission standards	-	China IV/Euro III/Euro V	China IV/Euro III/Euro V
5		Transmission Model	-	DANA TE30	DANA TE30
6		Drive Axle Model	-	KesslerD102PL341/ Guangdong Fuhua IVWF0432A0-1	KesslerD102PL341/ Guangdong Fuhua IVWF0432A0-1
7	Spreader	Model	-	LDJ450	LDJ450
8		Lateral movement distance	mm	±800	±800
9		Rotating angle	°	+105/-195	+105/-195
10		Tilt angle	°	±2	±2
11		Operation Weight	t	8.1	8.1
12		Applicable Objects	-	ISO20'/40'/45' Container	ISO20'/40'/45' Container
13		Tire	-	18.00-25 40PR	18.00-33 40PR

08 STANDARD CONFIGURATION

Active Safety Control	Rollover Protective Structure (ROPS)	Heavy-duty Speed Limit	Automatic fire extinguishing system
Adaptive Electronically Controlled Damping Technology	Dynamic Power Matchlng	OPS function	Vertical lift
Quick lift	Automatic weighing system	Telematics system	Manual/automatic shift
Power Cut-off	Engine preheat protection	Temperature Control monitor radiator	CAN bus communication
System Pressure Monitoring	Fault self-diagnosis	Twistlock position monitoring	Twistlock count
Container locating protection	Auto-lock container	Electric mobile cab	Cooling and heating air conditioner
Rpreader working condition three-color light inside cab	Co-driver seat with seat belt	Cab reading light	Reverse camera/radar
360° panoramic image	Cab overhead light	Voice control system	

09 OPTIONAL CONFIGURATION

Various spreader	Imported spreader	Tire pressure monitoring	Automatic lubrication system
Hydraulic oil heating	Spreader camera monitoring system	Eccentric load alarm system (for railway)	

10 ATTACHMENT OPTIONS

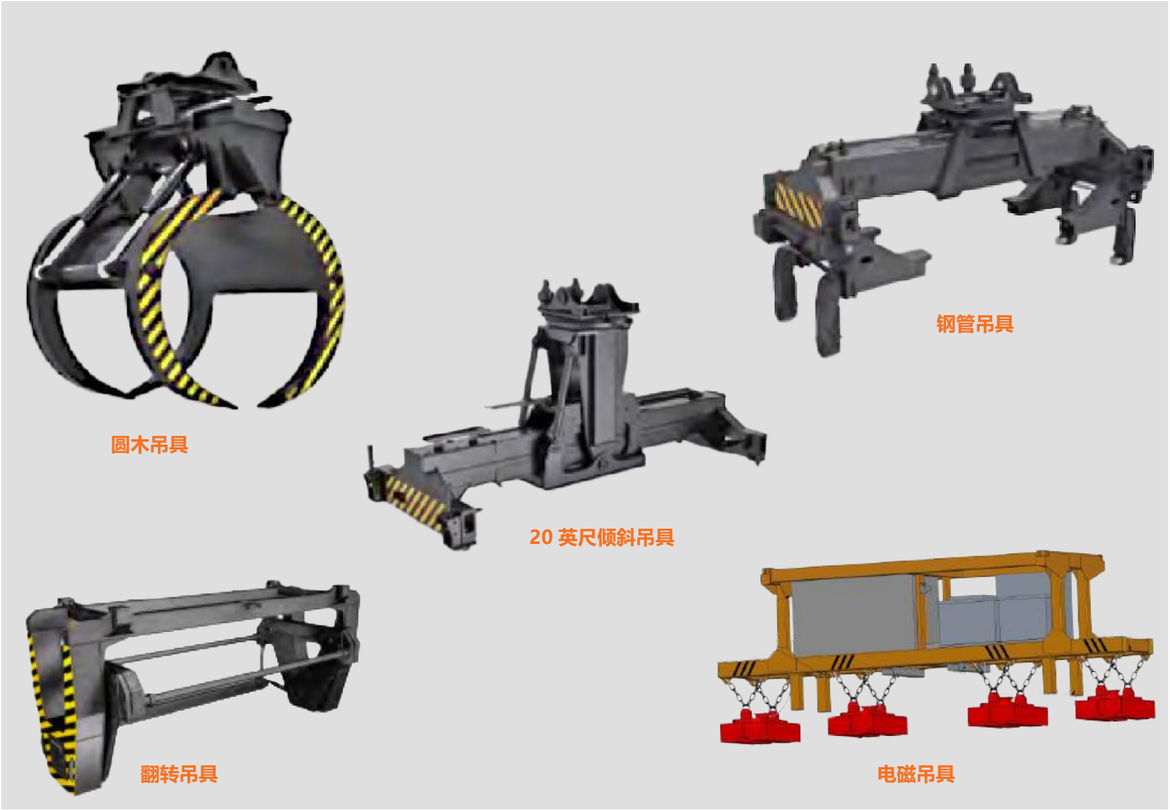

11 CONSTRUCTION CASES